1. General Description

A: SPECIFICATION

Lubrication method				Forced lubrication
Oil pump	Pump type			Trochoid type
	Number of teeth		Inner rotor	9
			Outer rotor	10
	Outer rotor diameter × thickness			78 × 10 mm (3.07 × 0.39 in)
	Tip clearance between inner and outer rotors		Standard	0.04 — 0.14 mm (0.0016 — 0.0055 in)
			Limit	0.18 mm (0.0071 in)
	Side clearance between inner rotor and pump case		Standard	0.02 — 0.07 mm (0.0008 — 0.0028 in)
			Limit	0.12 mm (0.0047 in)
	Case clearance between outer rotor and pump case		Standard	0.10 — 0.175 mm (0.0039 — 0.0069 in)
			Limit	0.20 mm (0.0079 in)
	Performance (Oil temperature 80°C (176°F))	600 rpm	Discharge pressure	98 kPa (1.0 kgf/cm^2, 14 psi)
			Discharge rate	4.6 ℓ (4.9 US qt, 4.0 Imp qt)/min.
		5,000 rpm	Discharge pressure	294 kPa (3.0 kgf/cm^2, 43 psi)
			Discharge rate	47.0 ℓ (49.7 US qt, 41.4 Imp qt)/min.
	Relief valve working pressure			588 kPa (6.0 kgf/cm^2, 85 psi)
Oil filter	Filter type			Full-flow filter type
	Filtration area	Outer diameter: 68 mm (2.68 in)		800 cm^2 (124 sq in)
		Outer diameter: 65 mm (2.56 in)		470 cm^2 (73 sq in)
	By-pass valve opening pressure			160 kPa (1.63 kgf/cm^2, 23.2 psi)
	Outer diameter × width	Outer diameter: 68 mm (2.68 in)		68 × 65 mm (2.68 × 2.56 in)
		Outer diameter: 65 mm (2.56 in)		65 × 74.4 mm (2.56 × 2.93 in)
	Installation screw specifications			M 20 × 1.5
Oil pressure switch	Type			Immersed contact point type
	Operating voltage — number of watts			12 V — 3.4 W or less
	Warning light operating pressure			14.7 kPa (0.15 kgf/cm^2, 2.1 psi)
	Proof pressure			981 kPa (10 kgf/cm^2, 142 psi) or more
Engine oil	Total capacity (Overhaul)			5.0 ℓ (5.3 US qt, 4.4 Imp qt)
	When replacing engine oil and oil filter			4.3 ℓ (4.5 US qt, 3.8 Imp qt)
	When replacing engine oil only			4.0 ℓ (4.2 US qt, 3.5 Imp qt)

Recommended oil:

Those with an API standard SM "Energy Conserving" logo.
ILSAC standard GF-4 "starburst mark" displayed on container top.

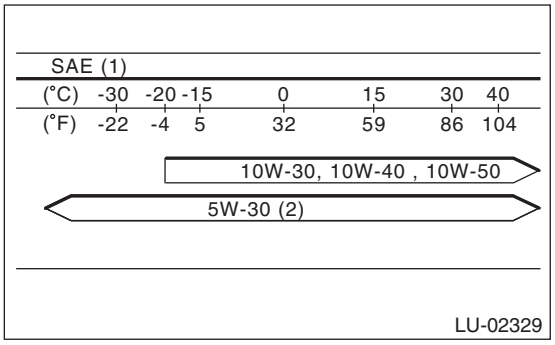

(1) SAE viscosity No. and applicable temperature
(2) Recommended

CAUTION:
It is acceptable to fill an engine with oil of another brand when replacing the oil, but make sure to use an oil with an API standard and SAE viscosity number specified by Subaru.

NOTE:
If the vehicle is used in regions of high temperatures or in other severe environments, use oil with the viscosities shown below. API standard: SM or SL
SAE Viscosity No.: 30, 40, 10W-50, 20W-40, 20W-50

B: COMPONENT

- Except for STI model

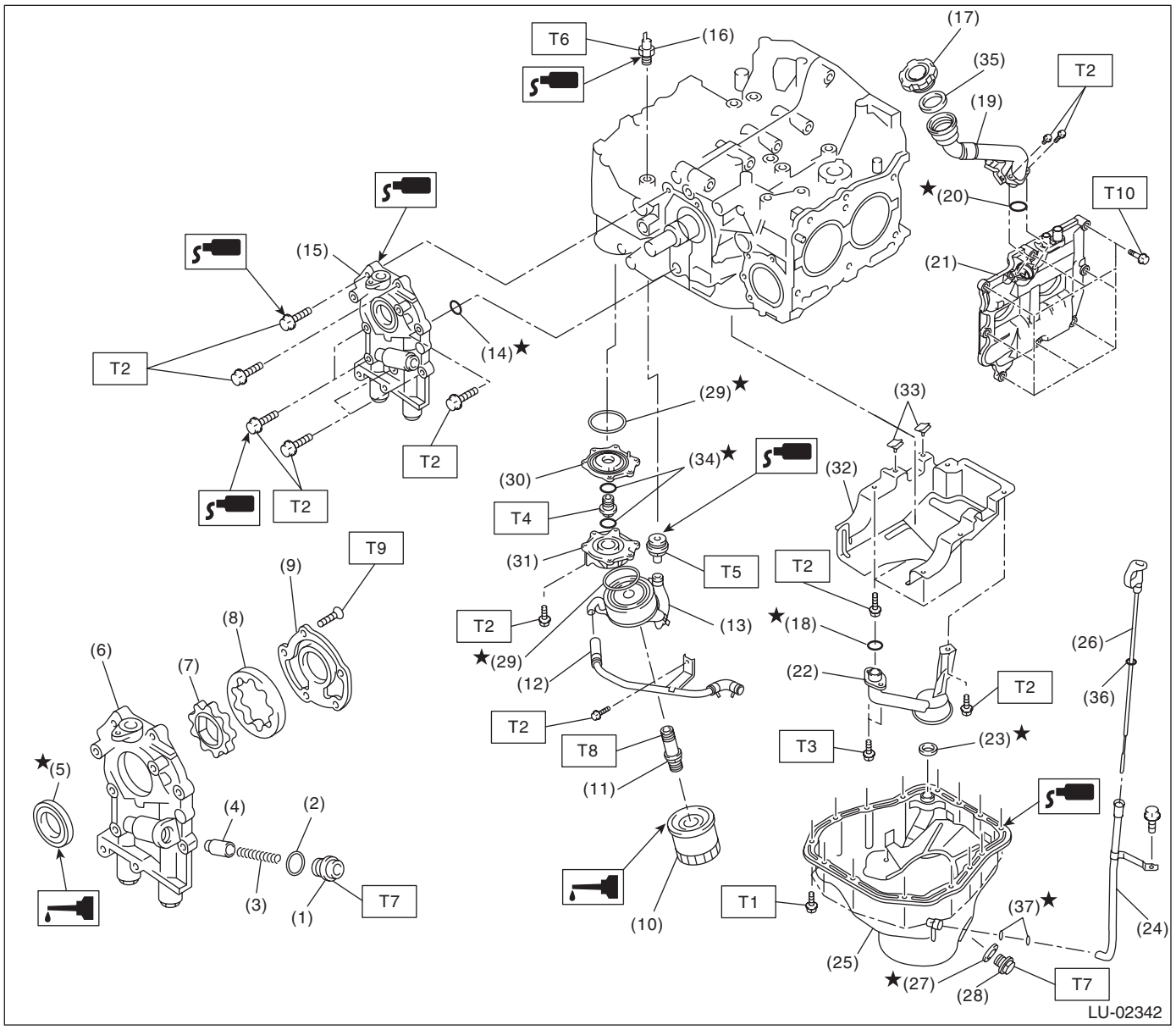

(1) Plug
(2) Gasket
(3) Relief valve spring
(4) Relief valve
(5) Oil seal
(6) Oil pump case
(7) Inner rotor
(8) Outer rotor
(9) Oil pump cover
(10) Oil filter
(11) Oil cooler connector
(12) Water by-pass pipe
(13) Oil cooler
(14) O-ring
(15) Oil pump ASSY
(16) Oil pressure switch
(17) Oil filler cap
(18) O-ring
(19) Oil filler duct
(20) O-ring
(21) Rocker cover
(22) Oil strainer
(23) Gasket
(24) Oil level gauge guide
(25) Oil pan
(26) Oil level gauge
(27) Metal gasket
(28) Drain plug
(29) Gasket
(30) ADAPTER A
(31) Adapter B
(32) Baffle plate
(33) Seal
(34) O-ring
(35) Gasket
(36) O-ring
(37) O-ring

Tightening torque:N·m (kgf-m, ft-lb)

T1:	***5 (0.5, 3.6)***
T2:	***6.4 (0.65, 4.7)***
T3:	***10 (1.0, 7.2)***
T4:	***45 (4.6, 33.2)***
T5:	***69 (7.0, 50.9)***
T6:	***25 (2.5, 18.1)***
T7:	***44 (4.5, 32.5)***
T8:	***54 (5.5, 40)***
T9:	***5.4 (0.55, 4.0)***
T10:	<Ref. to ME(H4DOTC)-59, INSTALLATION, Camshaft.>

- STI model

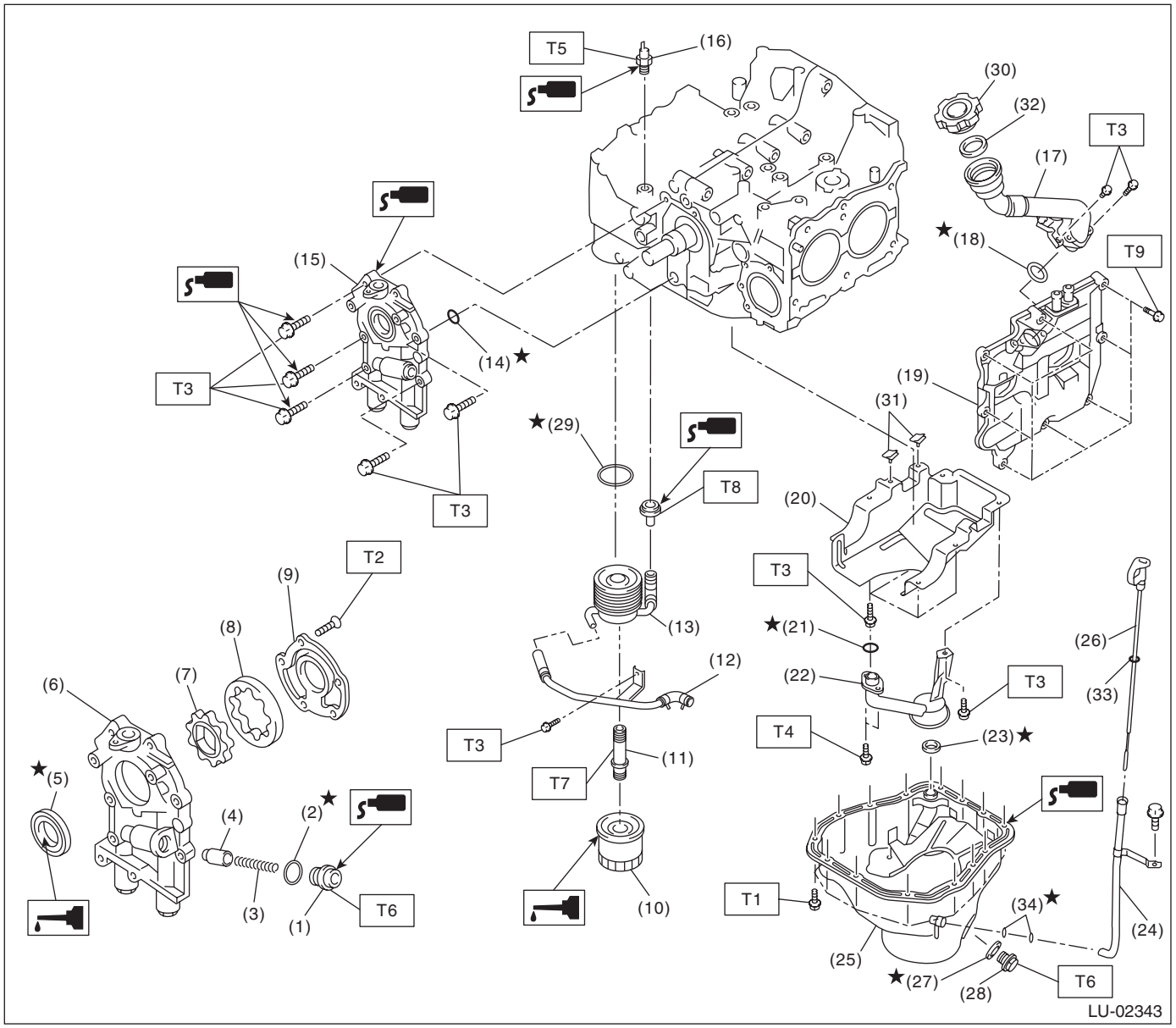

(1)	Plug	(17)	Oil filler duct	(32)	Gasket
(2)	Gasket	(18)	O-ring	(33)	O-ring
(3)	Relief valve spring	(19)	Rocker cover	(34)	O-ring
(4)	Relief valve	(20)	Baffle plate		
(5)	Oil seal	(21)	O-ring		
(6)	Oil pump case	(22)	Oil strainer		
(7)	Inner rotor	(23)	Gasket		
(8)	Outer rotor	(24)	Oil level gauge guide		
(9)	Oil pump cover	(25)	Oil pan		
(10)	Oil filter	(26)	Oil level gauge		
(11)	Oil cooler connector	(27)	Metal gasket		
(12)	Water by-pass pipe	(28)	Drain plug		
(13)	Oil cooler	(29)	Gasket		
(14)	O-ring	(30)	Oil filler cap		
(15)	Oil pump ASSY	(31)	Seal		
(16)	Oil pressure switch				

Tightening torque:N·m (kgf-m, ft-lb)

T1: 5 (0.5, 3.6)
T2: 5.4 (0.55, 4.0)
T3: 6.4 (0.65, 4.7)
T4: 10 (1.0, 7.2)
T5: 25 (2.5, 18.1)
T6: 44 (4.5, 32.5)
T7: 54 (5.5, 40)
T8: 69 (7.0, 50.9)
T9: <Ref. to ME(H4DOTC)-59, INSTALLATION, Camshaft.>

C: CAUTION

- Wear appropriate work clothing, including a cap, protective goggles and protective shoes when performing any work.
- Remove contamination including dirt and corrosion before removal, installation or disassembly.
- Keep the disassembled parts in order and protect them from dust and dirt.
- Before removal, installation or disassembly, be sure to clarify the failure. Avoid unnecessary removal, installation, disassembly and replacement.
- Vehicle components are extremely hot after driving. Be wary of receiving burns from heated parts.
- Be sure to tighten fasteners including bolts and nuts to the specified torque.
- Place shop jacks or rigid racks at the specified points.
- Before disconnecting connectors of sensors or units, be sure to disconnect the ground cable from the battery.

D: PREPARATION TOOL

1. SPECIAL TOOL

ILLUSTRATION	TOOL NUMBER	DESCRIPTION	REMARKS
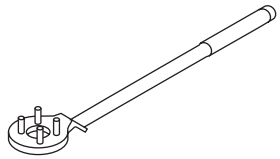 ST-499977100	499977100	CRANK PULLEY WRENCH	Used for stopping rotation of crank pulley when removing and tightening crank pulley bolt.
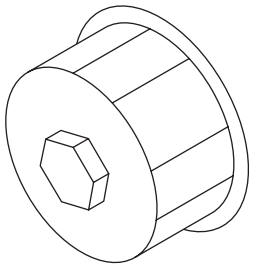 ST18332AA000	18332AA000	OIL FILTER WRENCH	Used for removing and installing oil filter. (Outer diameter: 68 mm (2.68 in))
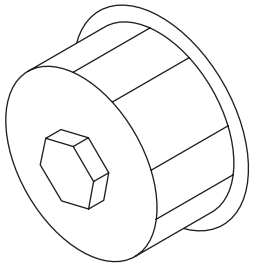 ST18332AA010	18332AA010	OIL FILTER WRENCH	Used for removing and installing oil filter. (Outer diameter: 65 mm (2.56 in))
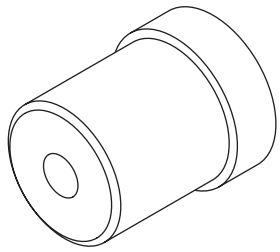 ST-499587100	499587100	OIL SEAL INSTALLER	Used for installing oil seal into oil pump.